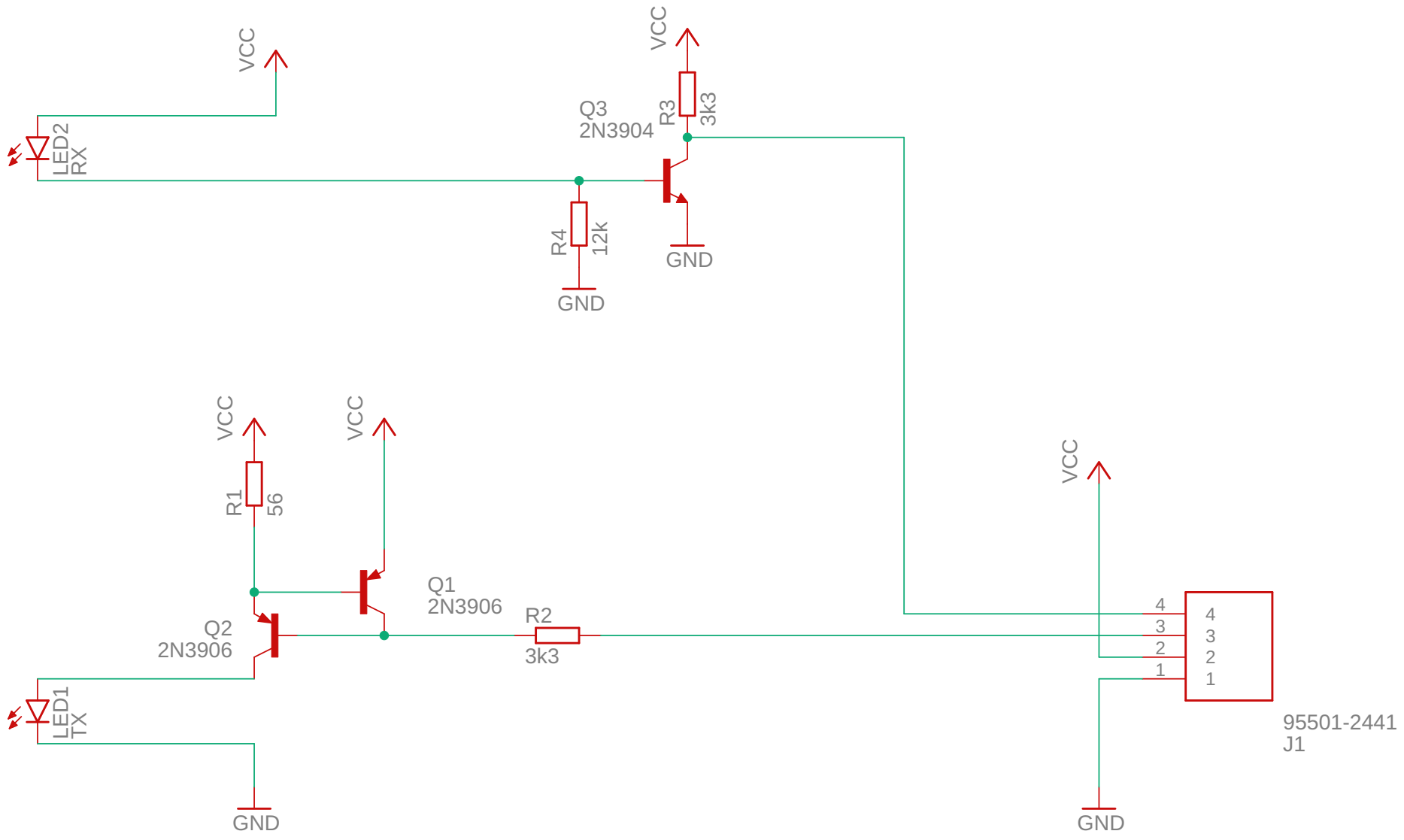
VCC
LED2
RX
Q3
2N3904
R3
3k3
R4
12k
GND
GND
VCC
VCC
R1
56
Q1
2N3906
Q2
2N3906
R2
3k3
LED1
TX
GND
VCC
4
3
2
1
95501-2441
J1
GND